Drawing Plotted: 19/03/2014 12:29:27 PM

PLANNING & ENVIRONMENT ACT 1987
MORELAND PLANNING SCHEME
This plan has been endorsed pursuant to Planning Permit MPS/2014/87
Signed
For and on behalf of Moreland City Council
Date 22/9/14
Sheet 20 of 21

MATERIALS AND FINISHES

- C04 — PRECAST CONCRETE PANEL WITH DIAGONAL UP PROFILED PATTERN (RECKLI OR SIMILAR) WITH INTEGRAL DARK GREEN OXIDE COLOURING
- C05 — PRECAST CONCRETE PANEL WITH DIAGONAL DOWN PROFILED PATTERN (RECKLI OR SIMILAR) WITH INTEGRAL LIGHT GREEN OXIDE COLOURING
- RS1 — COLORBOND ROOFING WITH 'WILDERNESS' FINISH, GUTTERS AND CAPPING TO MATCH
- MT1 — METAL LEAF MODULAR WALL TREATMENT REFER SKETCH DETAIL METAL 'LEAVES' TO HAVE DULUX POWDERCOAT FINISH IN FOLLOWING COLOURS:
  - 'COTTAGE GREEN' 84219 SATIN
  - 'WILDERNESS' 84224 SATIN
  - 'PALE EUCALYPT' 6127S SATIN
  - 'BUSHLAND' 6128S SATIN

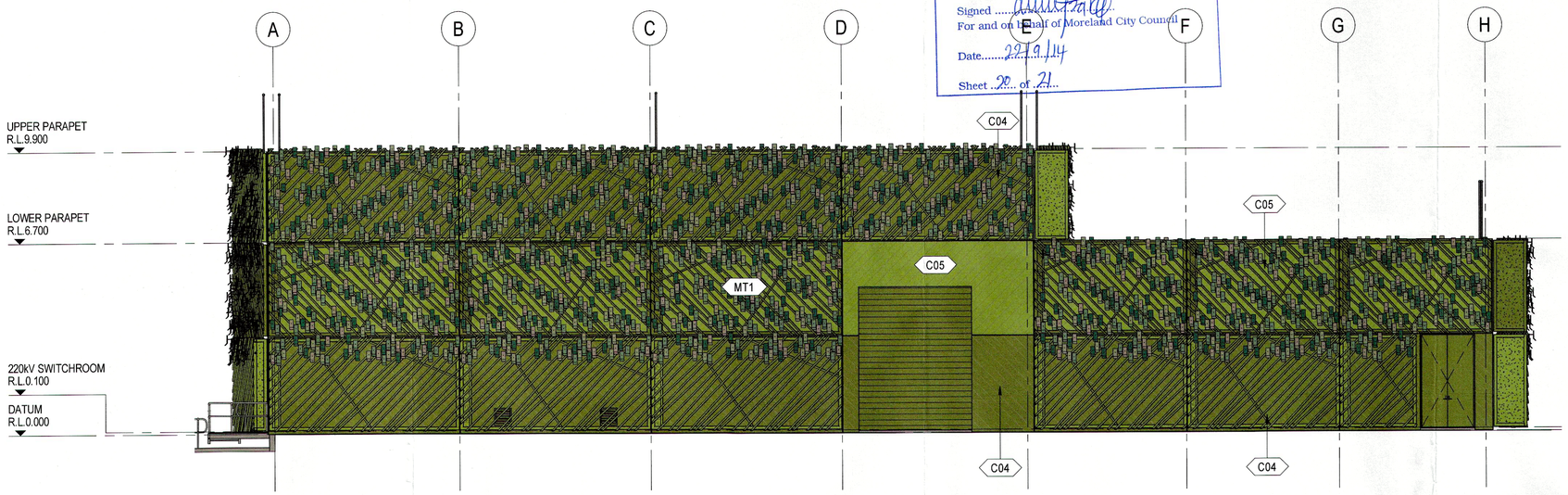

1 WEST ELEVATION
1 : 100

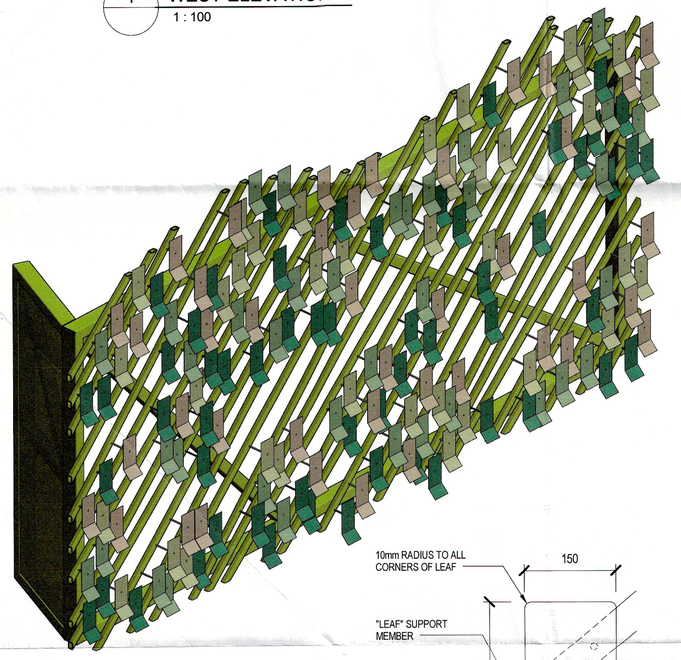

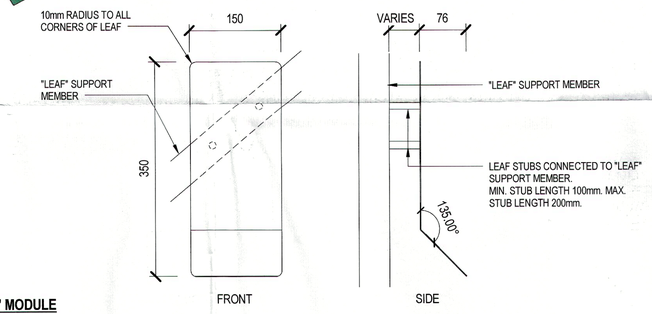

MT1
DETAIL SKETCH OF "LEAF" MODULE

'LEAF' DULUX POWDERCOAT COLOUR PALETTE
COLOURS TO BE APPLIES RANDOMLY TO 'LEAF' ELEMENTS

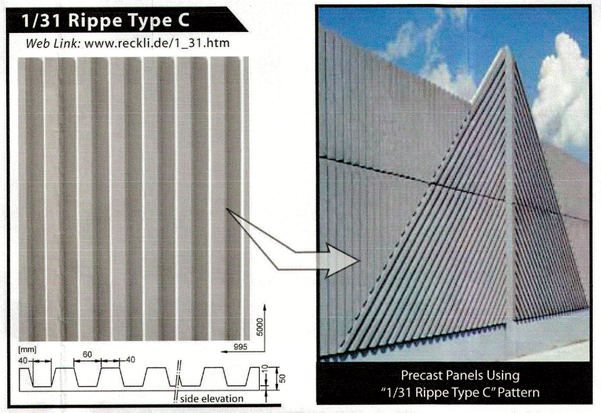

C04 C05
INDICATIVE PRECAST CONCRETE PANEL
45° APPLICATION AS INDICATED ON ELEVATIONS

FOR INFORMATION
NOT FOR CONSTRUCTION

REFERENCE DRAWINGS	
DRAWING TITLE	DRAWING No.

REVISION				
DATE	REV	DESCRIPTION	BY	CONTRACTOR
19.03.14	E	ISSUED FOR INFORMATION ONLY		BECA
12.06.13	D	ISSUED FOR INFORMATION ONLY		BECA
31.05.13	C	ISSUED FOR INFORMATION ONLY		BECA
18.11.11	B	ISSUED FOR INFORMATION ONLY		BECA
10.11.11	A	ISSUED FOR INFORMATION ONLY		BECA

DRAWN BECA
ENDORSED REV E
ISSUED
CONTRACTORS No. 2581973
SPEC No.
ORDER No.

BRUNSWICK TERMINAL STATION
220kv GIS BUILDING
DETAILS

SPI POWERNET
A subsidiary of Singapore Power International

SPI PowerNet No 2562740-A-19

Document No. C:\Users\Public\Documents\BecaCAD\Revit\2562740-AR-220kV Planning Update_TNC-AU2010.rvt

PowerNet STD A1

561 X 801
A1

This drawing and any information or descriptive matter set out hereon are the confidential and copyright property of SPI PowerNet and must not be disclosed, loaned, copied or used for manufacturing, tendering or for any other purpose without written permission. © 2000

[A1]